# Development and Analysis of Progressively Smarter Distribution System

**Fabian Mueller, Allie Auld and Scott Samuelsen**

Advanced Power and Energy Program

University of California, Irvine, CA

**Matt Heling, John Carruthers, Dan Pearson, Nick Ho, Andrew Yip, Del Evans, Kevin Dasso, Chris Knudsen**

Pacific Gas & Electric

San Francisco, CA

# Project Goals

- Quantify PV Integration Limitations (e.g, voltage)
- Develop and Evaluate Progressively Smarter Distribution Systems

© UCI Advanced Power and Energy Program, 2010

# Motivation

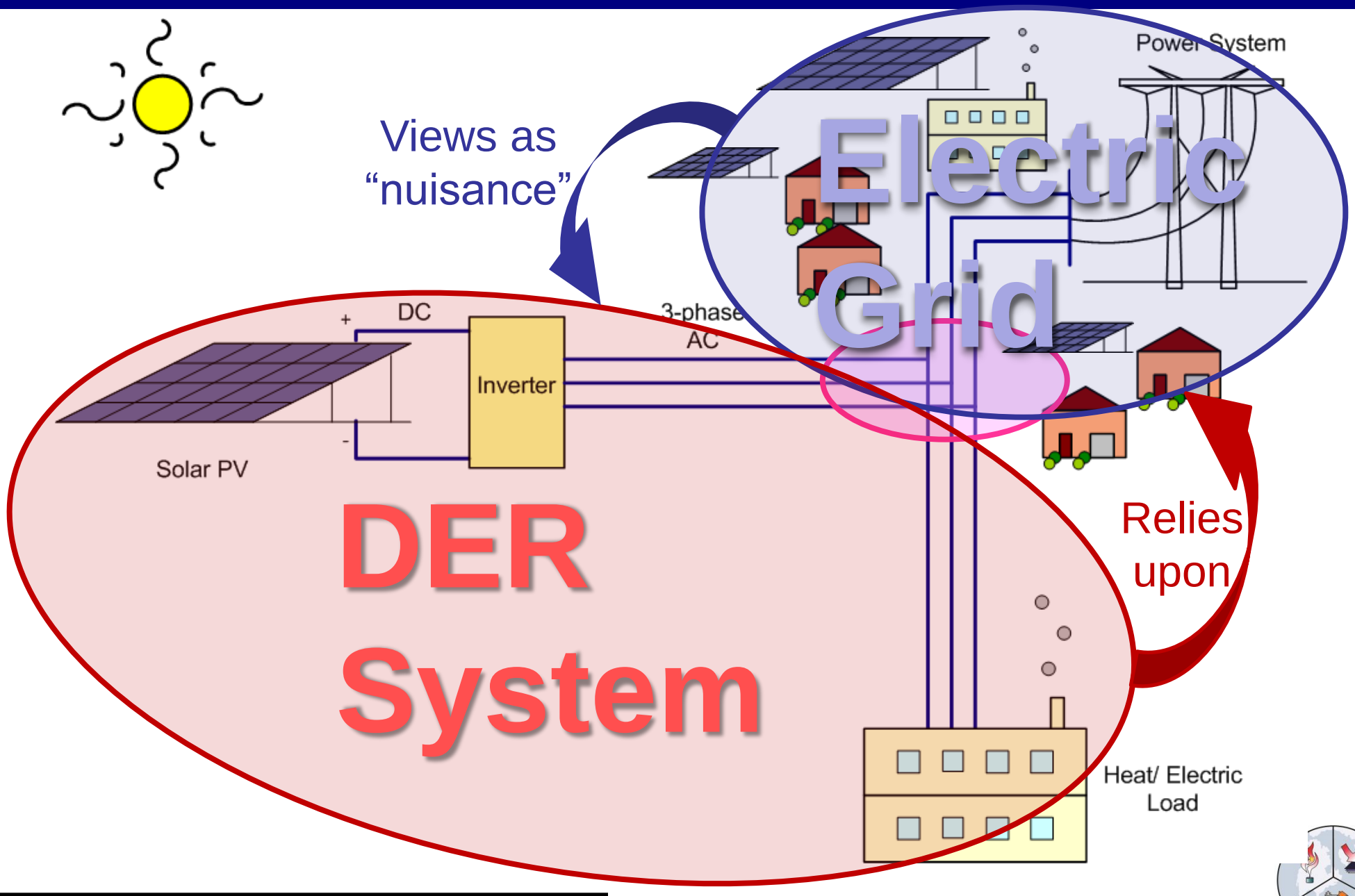


© UCI Advanced Power and Energy Program, 2010

# Approach

- Modeling and simulation coupled with available field data
- Develop, evaluate, and verify model
  - Apply to selected PG&E circuits
  - Compare to available PG&E circuit data
- Simulate increased PV installation on circuit
- Identify conditions of unacceptable circuit operation
- Quantify and understand conditions
- Evaluate circuit operation to enable increased PV installation
  - Capacitors (sub and circuit)
  - Inverters
  - Transformer set-points
- Develop a pathway to progressively smarter distribution system

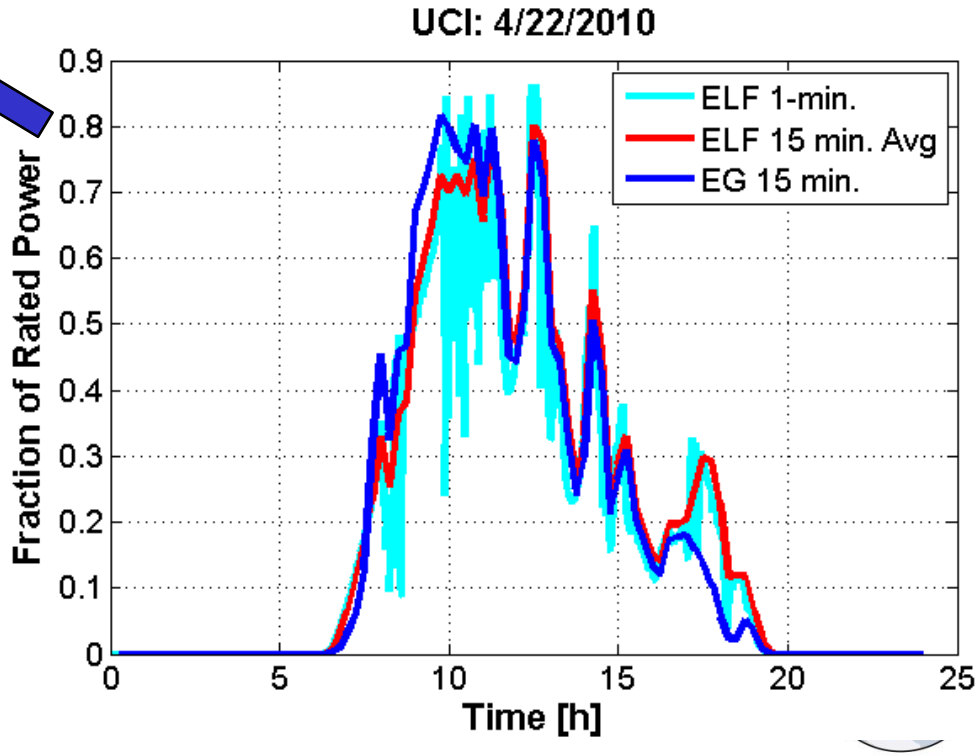


© UCI Advanced Power and Energy Program, 2010

# Tasks and Deliverables

| Tasks | Deliverables |
|---|---|
| 1.- Model development and evaluation | Model scenarios and comparisons to grid monitored data |
| 2.- Quantify PV integration limits | PV integration limits in typical distribution circuits |
| 3.- Advanced inverter control | Risks and benefits of advanced inverter control |
| 4.- Integrated distribution grid control | Progressively smarter integrated distribution system controls |
| 5.- Practical feasibility and outreach | Practical feasibility of the proposed controls and design |

© UCI Advanced Power and Energy Program, 2010

# Contributing Research

- Approach
- Inverter control strategies
- DG citizenship
- Single-bus simulation results
  - Solid Oxide Fuel Cell
- Multi-bus simulation results
  - Generic distribution circuit models

© UCI Advanced Power and Energy Program, 2010

# Contributing Research: Approach

## Single and two-bus models

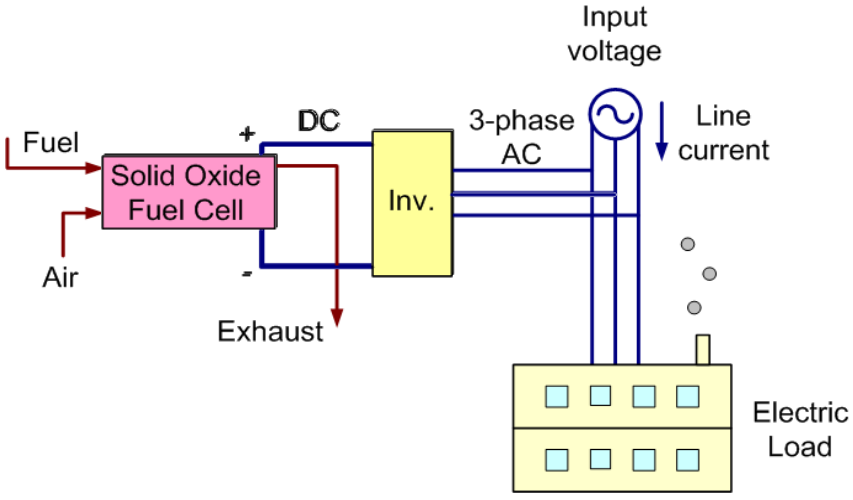


- **Advantages:**
  - Resolves distribution transformer secondary
  - Measured load data
  - Detailed component models
- **Disadvantages:**
  - Isolated system
  - Case-by-case

## Multi-bus radial and loop models

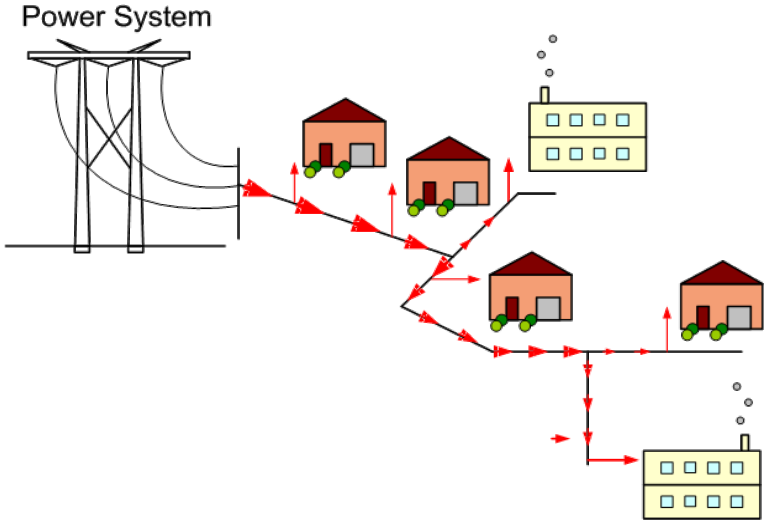


- **Advantages:**
  - Resolves distribution circuit primary
  - Includes many loads and distribution system equipment
- **Disadvantages:**
  - Assumes balanced load
  - Neglects harmonics
  - Generalized DER models

© UCI Advanced Power and Energy Program, 2010

# Contributing Research: DG Citizenship

**DG (distributed generation) interconnection can be classified by three levels of citizenship:**

- **Model citizen**
- **Good citizen**
- **Poor citizen**

| | Model citizen | Good citizen | Poor Citizen |
|---|---|---|---|
| Voltage maximum | $V_{max} < 1.05$ | $V_{max} \leq 1.05$ | $V_{max} > 1.05$ |
| Voltage minimum | $V_{min} = 0.98$ | $V_{min} \geq 0.98$ | $V_{min} < 0.98$ |
| Real power importation | Load leveling | $P_{dem} \leq P_{dem,max}$ | $P_{dem} > P_{dem,max}$ |
| Reactive Power Importation | Load leveling | $Q_{dem} \leq Q_{dem,max}$ | $Q_{dem} > Q_{dem,max}$ |
| Harmonic distortion | Lower | No change | Higher |

© UCI Advanced Power and Energy Program, 2010

# Contributing Research: Control Strategies

## Traditional inverter control strategies:

- **Base case**
  - DG provides rated capacity of real power
  - Recommended by IEEE-1547
- **Power factor correction (PFC)**
  - DG provides rated capacity of real power
  - Q output equal to local Q consumption
  - Allowed by IEEE-1547
- **Local voltage regulation (LVR)**
  - DG provides rated capacity of real power
  - Q output as function of local voltage
  - Forbidden by IEEE-1547
- **Real power curtailment**
  - Uses local voltage to determine real power
  - V > 1.05 p.u. : Reduces real power output
  - 1.05 > V > 1.04 p.u. : Maintain power output
  - V < 1.04 p.u. : Increase real power if below rated capacity

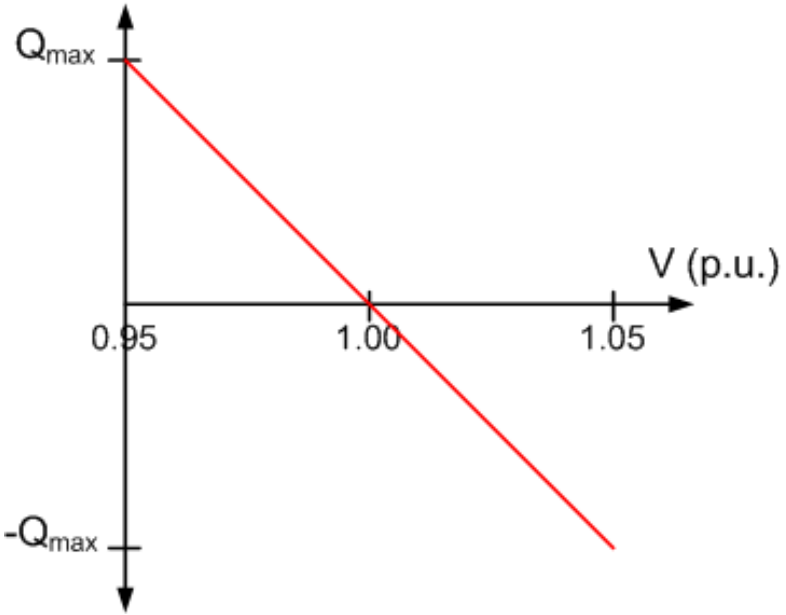


LVR: Q output as a function of voltage

© UCI Advanced Power and Energy Program, 2010

# Contributing Research: Single-Bus

**Baseline SOFC interconnection case:**

- **Examine inverter-load relationship**
- **SOFC prime mover**
- **Assume desired $P_{grid}$ = 10 kW**
- **Inverter uses voltage reference**

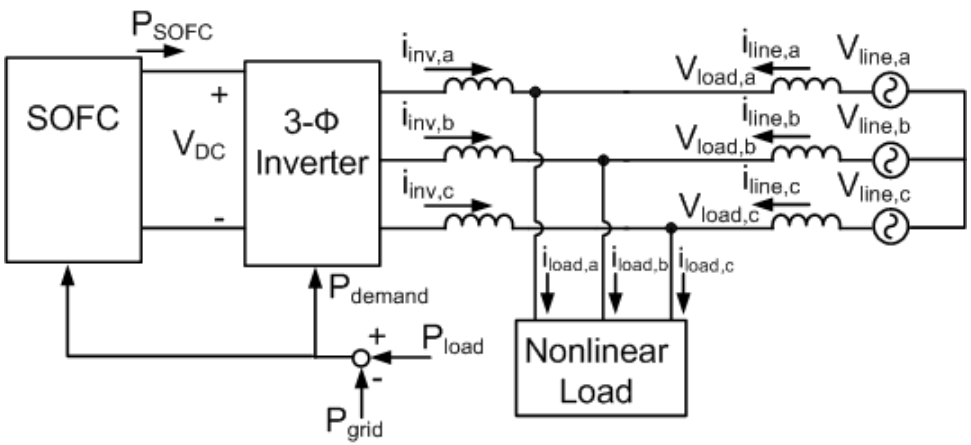


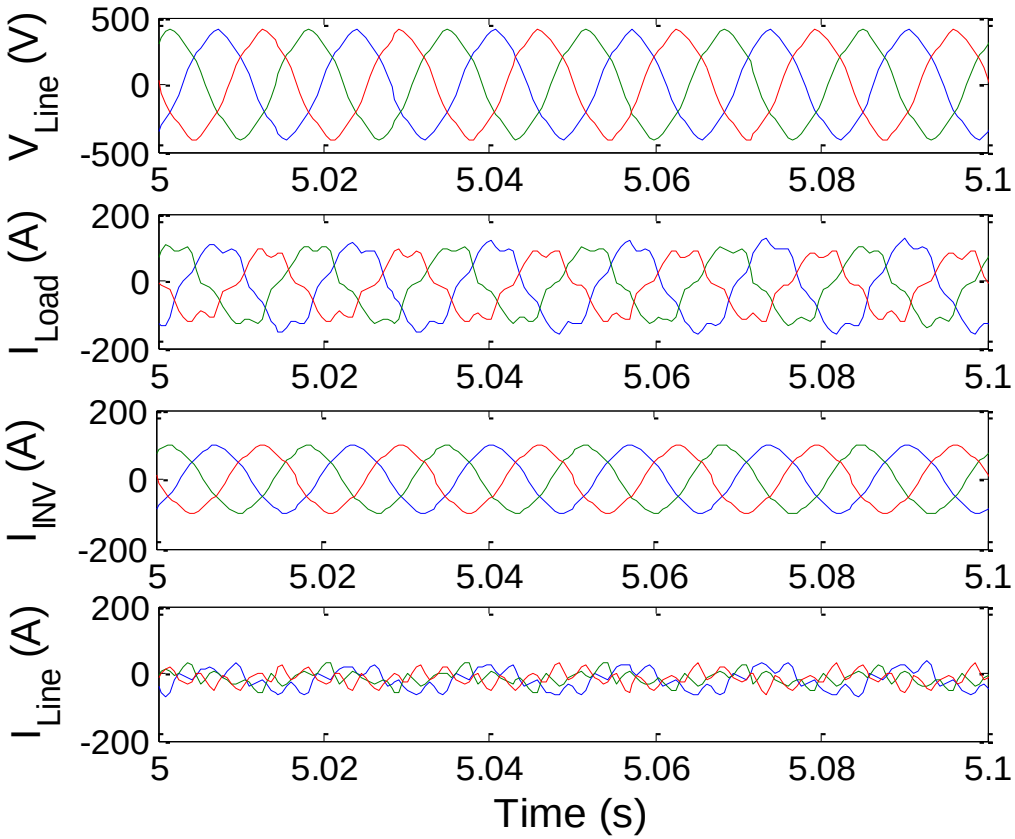


**Inverter-only design is insufficient to compensate harmonics**

© UCI Advanced Power and Energy Program, 2010

# Contributing Research: Single-Bus

**Baseline SOFC interconnection case:**

- **Examine inverter-load relationship**
- **SOFC prime mover**
- **Assume desired $P_{grid}$ = 10 kW**
- **Inverter uses voltage reference**
- **Addition of APF**

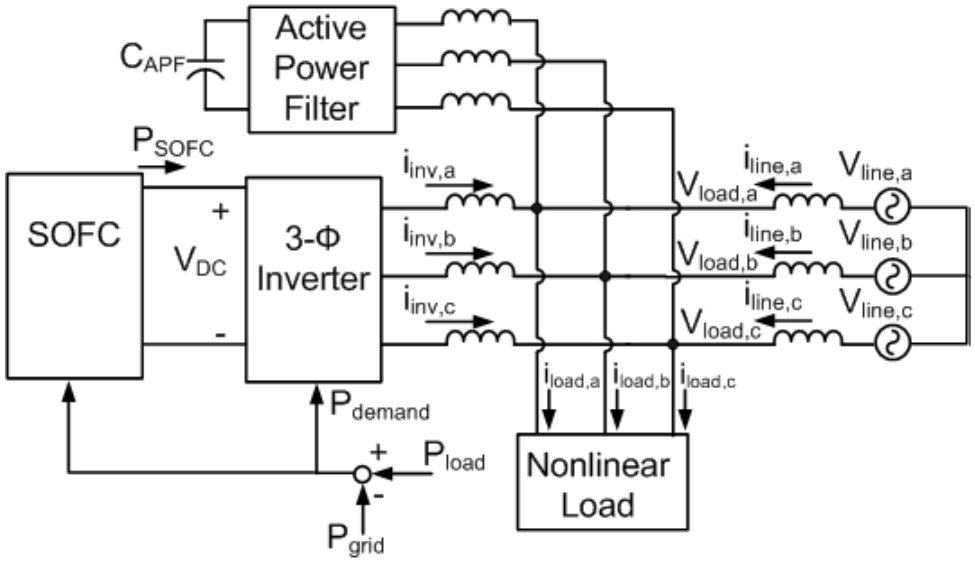


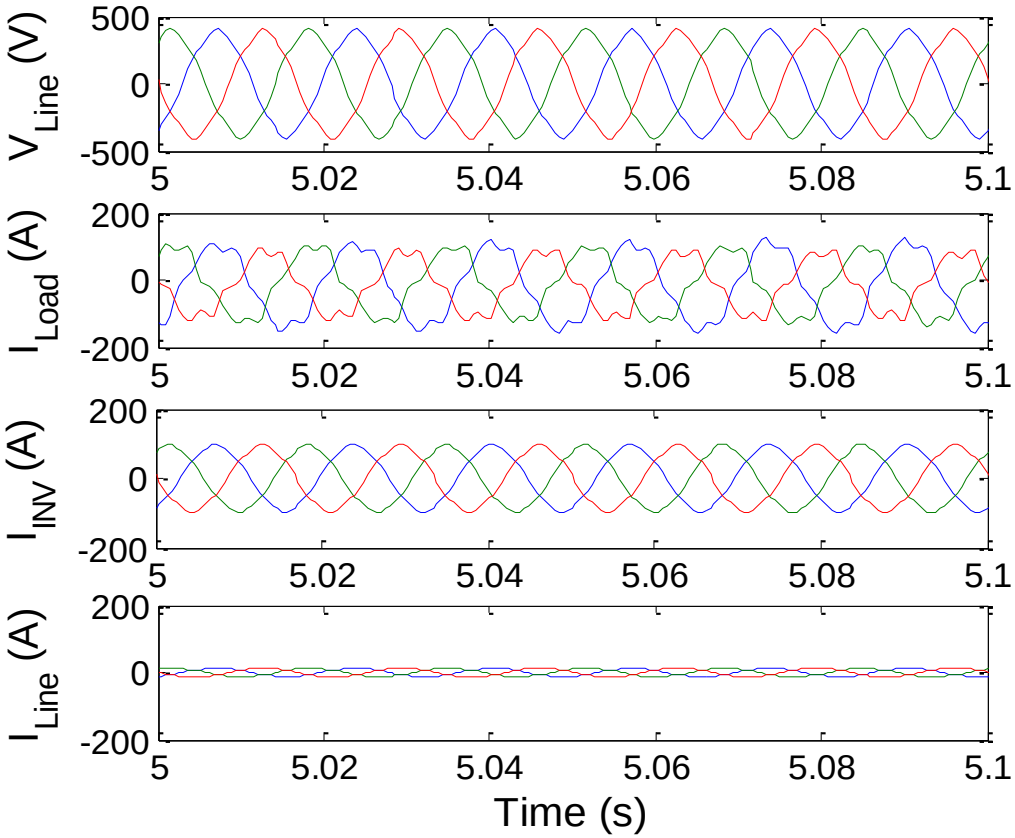


**APF compensates harmonics and improves the line current provided by the grid**


Auld, A.E., Mueller, F., Smedley, K.M., Samuelsen, S., and Brouwer, J., "Applications of one-cycle control to improve the interconnection of a solid oxide fuel cell and electric power system with a dynamic load," *Journal of Power Sources*, vol. 179, pp. 155-163, 2008.

# Contributing Research: Multi-Bus (I/II)

**Generic sample circuit A:**

- **Substation: Fixed 1.05 p.u.**
- **4-mile long**
- **No capacitors**
- **Voltage limit: 0.98 - 1.05 p.u.**
- **Urban circuit**

| | Baseline |
|---|---|
| Overvoltage | Beg. (100%+) |
| | Middle (30%+) |
| | End (20%+) |

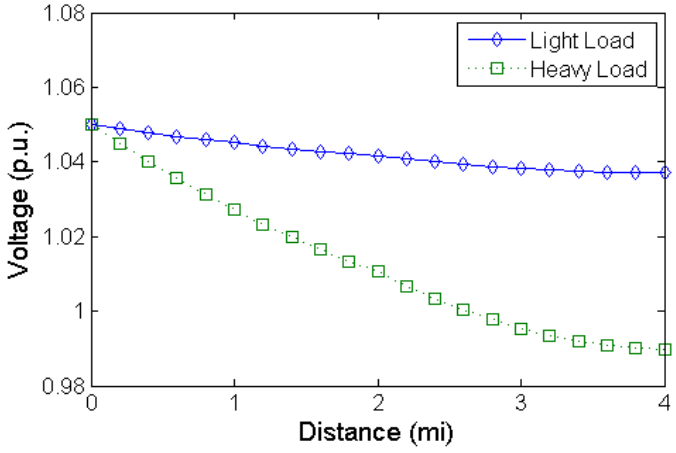


**No DG**

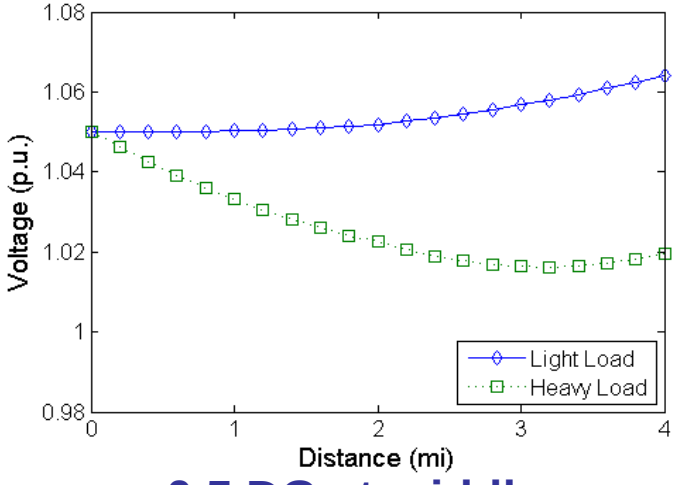


**0.5 DG at middle**

© UCI Advanced Power and Energy Program, 2010

# Contributing Research: Multi-Bus (I/II)

**Generic sample circuit A:**

- **Substation: Fixed 1.05 p.u.**
- **4-mile long**
- **No capacitors**
- **Voltage limit: 0.98 - 1.05 p.u.**
- **Urban circuit**

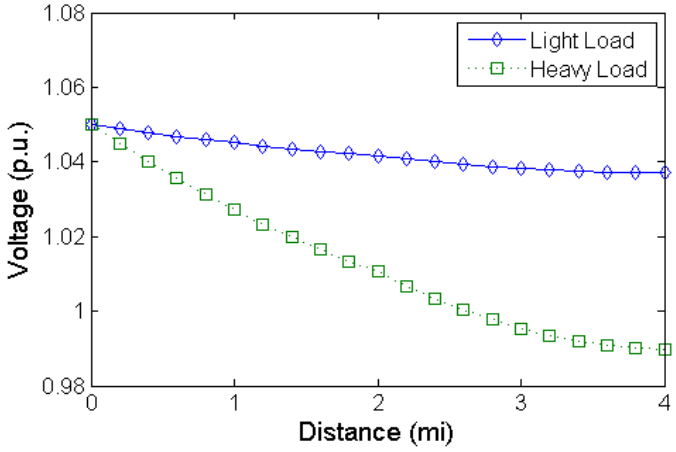


**No DG**

| | Baseline | LVR | RPC |
|---|---|---|---|
| Overvoltage | Beg. (100%+) | Fixes | Fixes |
| | Middle (30%+) | Fixes | Fixes |
| | End (20%+) | Fixes | Fixes |

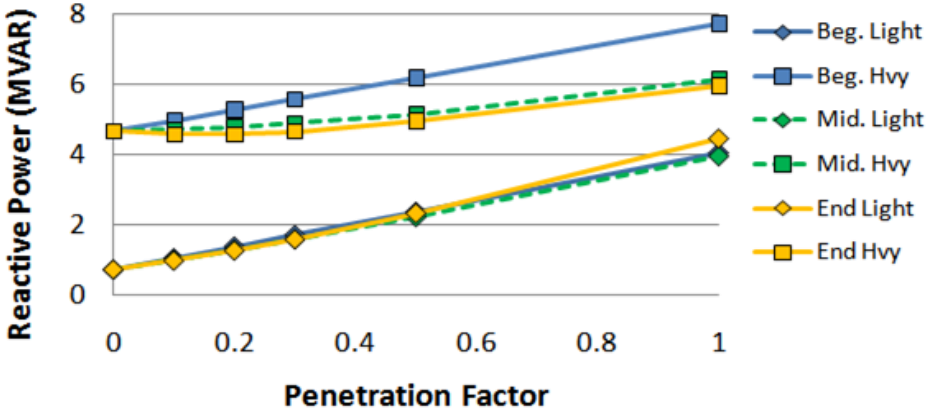


**Substation reactive power**

© UCI Advanced Power and Energy Program, 2010

# Contributing Research: Multi-Bus (I/II)

**Generic sample circuit A:**

- **Substation: Fixed 1.05 p.u.**
- **4-mile long**
- **No capacitors**
- **Voltage limit: 0.98 - 1.05 p.u.**
- **Urban circuit**

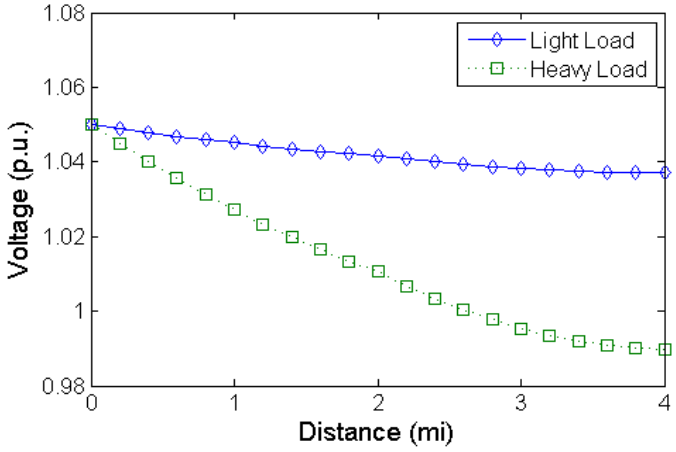


**No DG**

| | Baseline | LVR | RPC |
|---|---|---|---|
| Overvoltage | Beg. (100%+) | Fixes | Fixes |
| | Middle (30%+) | Fixes | Fixes |
| | End (20%+) | Fixes | Fixes |

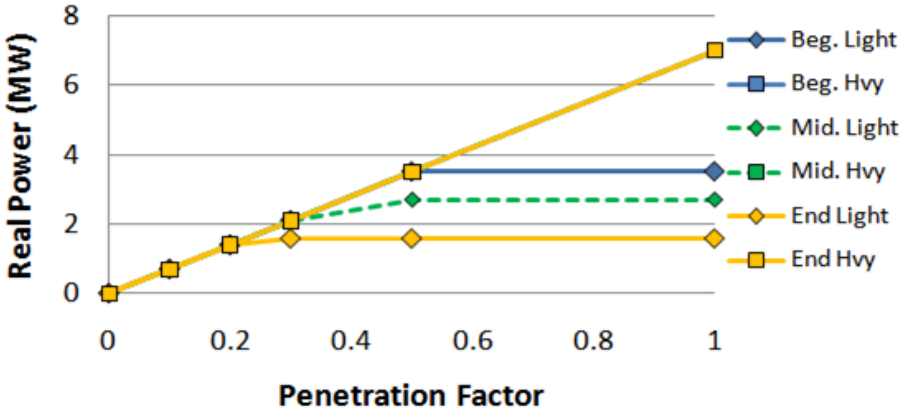


**Curtailment real power**

© UCI Advanced Power and Energy Program, 2010

# Contributing Research: Multi-Bus (II/II)

**Generic sample circuit B:**

- **Substation: Regulated with LDC**
- **8-mile long**
- **Four capacitor banks (1200 kVAR)**
- **Voltage limit: 0.98 - 1.05 p.u.**
- **Suburban/rural circuit**

| | Baseline | LVR | RPC |
|---|---|---|---|
| Overvoltage | Middle (50%+) | Fixes | No Effect |
| | End (10%+) | Fixes | Fixes |
| Undervoltage | Beg. (30%+) | WORSE | No Effect |
| | Middle (50-100%) | Fixes | No Effect |
| | End (50-100%) | Fixes | Fixes |

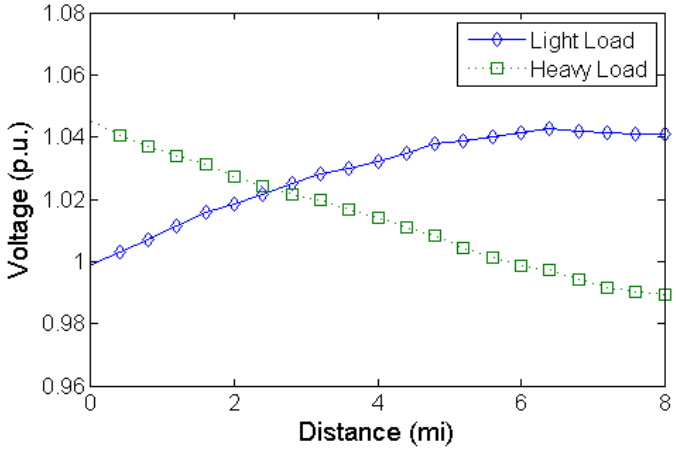


**No DG**

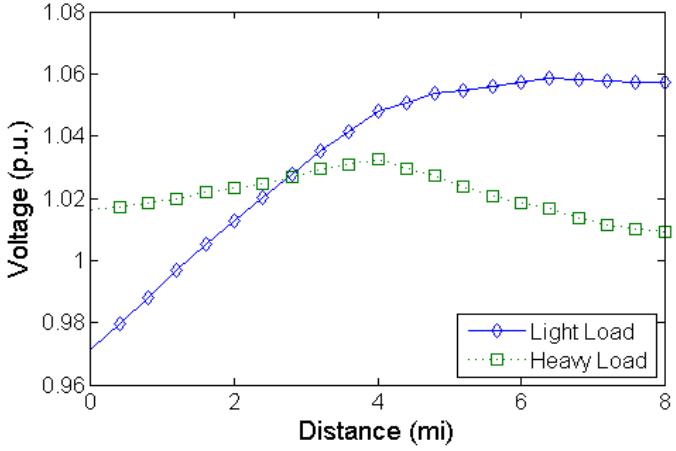


**1.0 DG at middle**

Auld, A.E., Smedley, K.M., Brouwer, J., and Samuelsen, G.S.,
"Effect of Distributed Generation on Voltage Levels in a Radial Distribution Network without Communication,"
*ASME Journal of Fuel Cell Science and Technology*, in press.

# Contributing Research: Summary

- **Power system citizenship of various locations on the generic circuits**

| 10% DG Penetration | Location | Baseline | LVR | Curtailment |
|---|---|---|---|---|
| Circuit A | Beginning | Good | Poor (Q) | Good |
| | Middle | Good | Good | Model |
| | End | Model | Model | Model |
| Circuit B | Beginning | Good | Poor (Q) | Good |
| | Middle | Good | Good | Good |
| | End | Poor (V) | Good | Model |

| 20% DG Penetration | Location | Baseline | LVR | Curtailment |
|---|---|---|---|---|
| Circuit A | Beginning | Good | Poor (Q) | Good |
| | Middle | Model | Poor (Q) | Model |
| | End | Model | Model | Model |
| Circuit B | Beginning | Good | Poor (Q) | Good |
| | Middle | Good | Good | Good |
| | End | Poor (V) | Good | Model |

# Contributing Research: Summary

- **Power system citizenship of various locations on the generic circuits**

| 30% DG Penetration | Location | Baseline | LVR | Curtailment |
|---|---|---|---|---|
| Circuit A | Beginning | Good | Poor (Q) | Good |
| | Middle | Model | Poor (Q) | Model |
| | End | Poor (V) | Model | Model |
| Circuit B | Beginning | Poor (V) | Poor (Q) | Poor (V) |
| | Middle | Good | Good | Good |
| | End | Poor (V) | Good | Model |

| 50% DG Penetration | Location | Baseline | LVR | Curtailment |
|---|---|---|---|---|
| Circuit A | Beginning | Good | Poor (Q) | Good |
| | Middle | Poor (V) | Poor (Q) | Model |
| | End | Poor (V) | Model | Model |
| Circuit B | Beginning | Poor (V) | Poor (Q) | Poor (V) |
| | Middle | Poor (V) | Poor (Q) | Poor (V) |
| | End | Poor (V) | Poor (Q) | Model |

# Contributing Research: Summary

- **Power system citizenship of various locations on the generic circuits**

| 100% DG Penetration | Location | Baseline | LVR | Curtailment |
|---|---|---|---|---|
| Circuit A | Beginning | Good | Poor (Q) | Good |
| | Middle | Poor (V) | Poor (Q) | Model |
| | End | Poor (V) | Poor (Q) | Model |
| Circuit B | Beginning | Poor (V) | Poor (V) | Poor (V) |
| | Middle | Poor (V) | Poor (Q) | Poor (V) |
| | End | Poor (V) | Poor (Q) | Model |

# Proposed Research

- **Build on this foundation**
- **Apply to existing circuits**
- **Evaluate and verify with available detailed field data**
- **Quantify PV integration limitations**
- **Develop and Evaluate Progressively Smarter Distribution Systems**

© UCI Advanced Power and Energy Program, 2010

# Development and Analysis of Progressively Smarter Distribution System

**Fabian Mueller, Allie Auld and Scott Samuelsen**

Advanced Power and Energy Program

University of California, Irvine, CA

**Matt Heling, John Carruthers, Dan Pearson, Nick Ho, Andrew Yip, Del Evans, Kevin Dasso, Chris Knudsen**

Pacific Gas & Electric

San Francisco, CA